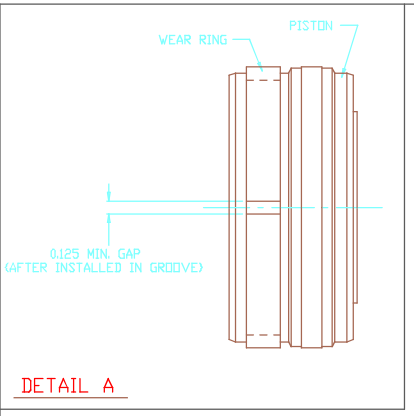

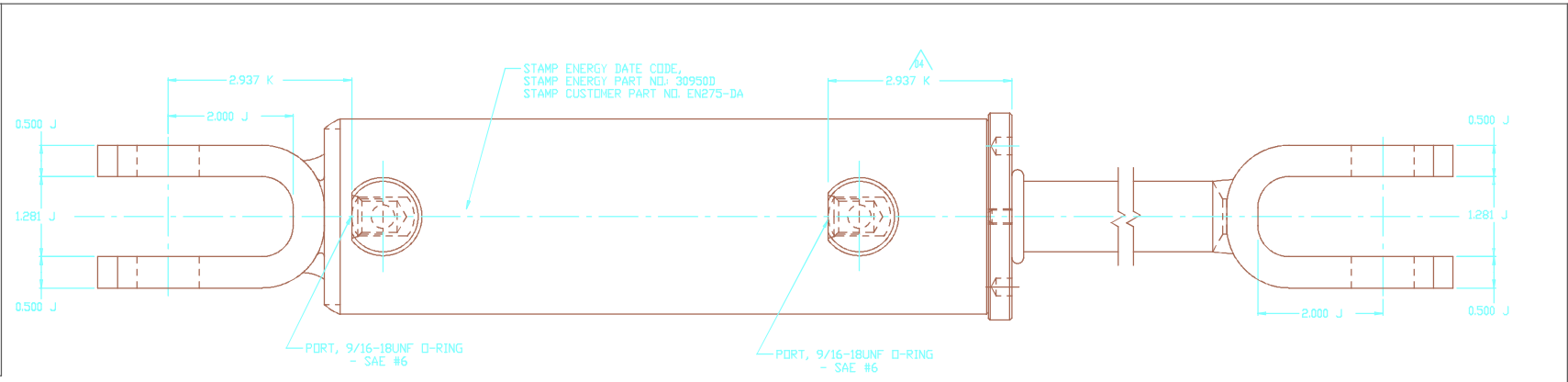

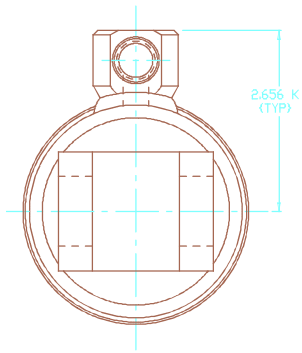

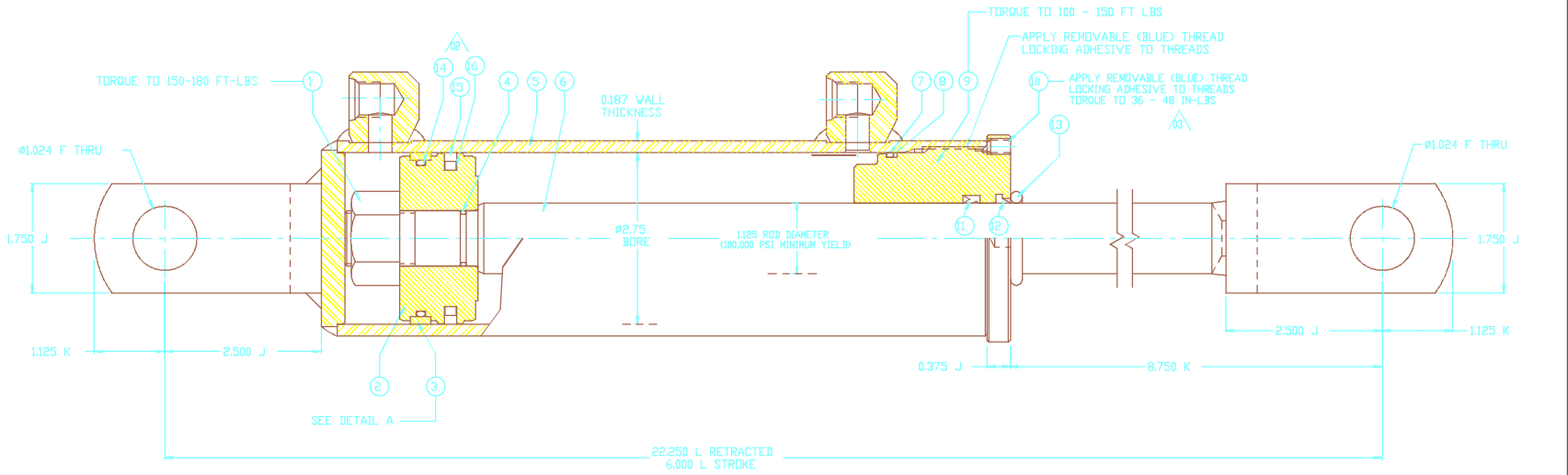

CYLINDER RATING

CYLINDER PRESSURE RATING ..... 3,000 PSI

OPERATING TEMPERATURE RANGE ..... -40 F TO 200 F

MINIMUM STRUCTURAL SAFETY FACTOR 2:1

MINIMUM WALL BURST PRESSURE ..... 10,810 PSI

MAXIMUM RECOMMENDED ROD SPEED ..... 100 FT/MIN.
MINIMUM RECOMMENDED ROD SPEED ..... 5 FT/MIN.
**** ROD SPEEDS UNDER 5 FT/MIN MAY CAUSE
SEAL NOISE DUE TO STICK/SLIP.

RECOMMENDED MAXIMUM COLUMN LOAD AT FULL EXTENSION
WITH 2:1 SAFETY FACTOR, NO SIDE LOAD,
PINNED ENDS AND NO INTERMEDIATE BRACING ..... 15,065 LBS
(2,560 PSI)

BORE :	2.750	STOP TUBE :	0
ROD. DIA. :	1.125	FINISH :	55/65 BLACK
STROKE :	6.000	ROD FINISH :	HARD CHROME

NOTE: 1) CYLINDER WILL REPHASE AT THE END OF THE EXTEND STROKE.
TWO SLOTS ON GROOVED END OF CYLINDER.

SEAL KIT: 30953X

PINS: NOT FURNISHED

30950D REPLACES Q30950D

TRIPLE C. MFG.
PART NO.: EN275-DA

No.	Revision	Date	Appr. By
04	2.937 WAS 2.812	02.15.11	EDM347
03	36/48 IN LBS WAS 3/4 FT LBS	04.10.07	EDO297
02	BALLOON PISTON SEALS SEPARATE	08.22.06	EDO314
01	ISSUE DRAWING	07.25.06	EDO314

Third Angle Projection

DO NOT SCALE PRINT

UNLESS OTHERWISE SPECIFIED
Letters after dimensions defines tolerances as follows

A +/-	0.00015	G +/-	0.001
B +/-	0.0003	H +/-	0.003
C +/-	0.0005	J +/-	0.030
D +/-	0.001	K +/-	0.060
E +/-	0.002	L +/-	0.125
F +/-	0.005	Angle +/-	2°

Material

Ht. Treat:
Finish

Drawn by: SA 07.25.06

Checked by

Approved By:

ENERGY MFG. CO., INC.

Title: CHD-2706,1.125 ROD,SPECIAL

Scale: 1:4

30950D 04

ALL DRAWINGS AND BLUEPRINTS SUPPLIED BY ENERGY MANUFACTURING CO. ARE SUBJECT TO PROTECTION UNDER THE UNITED STATES COPYRIGHT LAW, WHICH AMONG OTHER THINGS, PROHIBITS REPRODUCTION, DERIVATION OR DISTRIBUTION OF COPIES. THE DRAWINGS CONTAIN TRADE SECRETS OF ENERGY MANUFACTURING CO. AND ARE SUPPLIED TO THE VENDOR OR CUSTOMER ON A CONFIDENTIAL BASIS AND SHALL NOT BE DISCLOSED OR DISTRIBUTED TO OTHERS WITHOUT THE PRIOR EXPRESS WRITTEN PERMISSION OF ENERGY MANUFACTURING CO. ALL DRAWINGS AND OTHER WRITTEN MATERIALS PROVIDED TO THE VENDOR OR CUSTOMER SHALL BE RETURNED TO ENERGY MANUFACTURING CO. WHEN THE NEED FOR SUCH MATERIALS IS ENDED, OR UPON THE EARLIER DEMAND FOR THE RETURN OF THE MATERIALS BY ENERGY MANUFACTURING CO.